FREETARGET

Application Note: Advanced Operation

SUMMARY

The original intention of the FreeETarget product was for operation in a simple ten-meter air gun range. This requirement was easily satisfied using a single fifteen-meter USB cable which provided power and data to the target. While this worked well for a single target, it becomes cumbersome for multiple targets or targets placed longer than ten meters away. Over time, various hardware and software changes have been made to accommodate these advanced use cases.

This application note describes using FreeETarget in advanced operations:

REQUIRED

- ESP32 Firmware Version 6.3.0 or higher
- freETarget PC software

ALTERNATE INSTALLATION METHODS

The default operation of the target is a single target on a ten-meter range. This is satisfied using a fifteen-meter USB cable, or a battery and WiFi. When expanded to a large range with three or more lanes or longer distances, the WiFi can become problematic. To help in these cases, the target can be configured with alternative cabling or networks.

Connection	Advantage	Disadvantage	Note
USB Cable	Simple Allows for target software updates	Requires special cable	
RS485	Inexpensive Wiring	Requires that the target be powered by 12Volt Supply	Cannot be used at the same time as Ethernet
Ethernet	Reliable communications Multiple Targets on one network	Requires cabling and a router to implement	Cannot be used at the same time as RS485
WiFi	Multiple targets on one network	Requires expertise in network management	

Any one target can use these communications methods either singly or together.

Simple Target Installation

Regardless of the final configuration of the target, all FreeETarget installations share the same common features

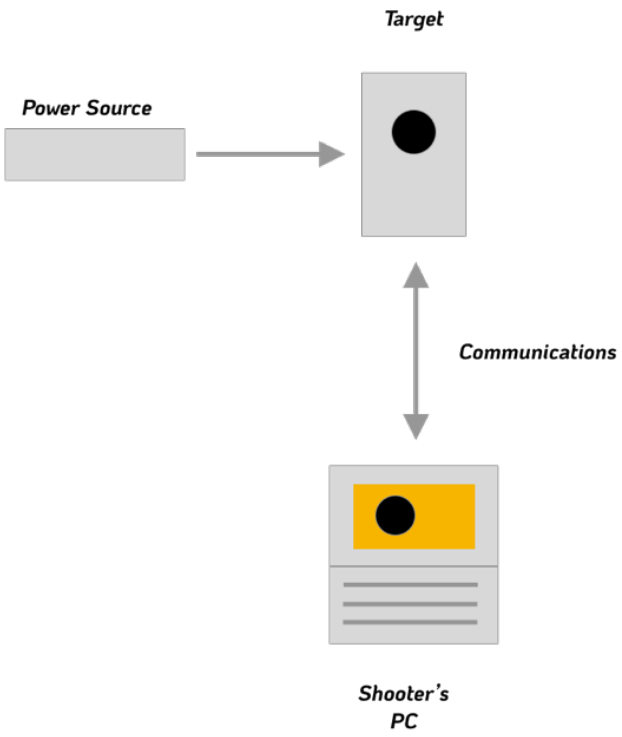

Figure 1: Simple Target Installation

When using witness paper or the LED illumination the target needs a power supply. Choices include

- USB power bank
- USB cable connected to a PC
- 12VDC-2A wall power supply

This application note describes the steps needed to install multiple targets side-by-side in a single shooting range. The steps are:

- Give the target a name
- Put the target onto the home WiFi
- Assign an IP address
- Calibrating the target

Shooting Ranges

A shooting range typically has multiple target stands, and each target stand can be observed by one or more people. Figure 2 illustrates a typical shooting range setup.

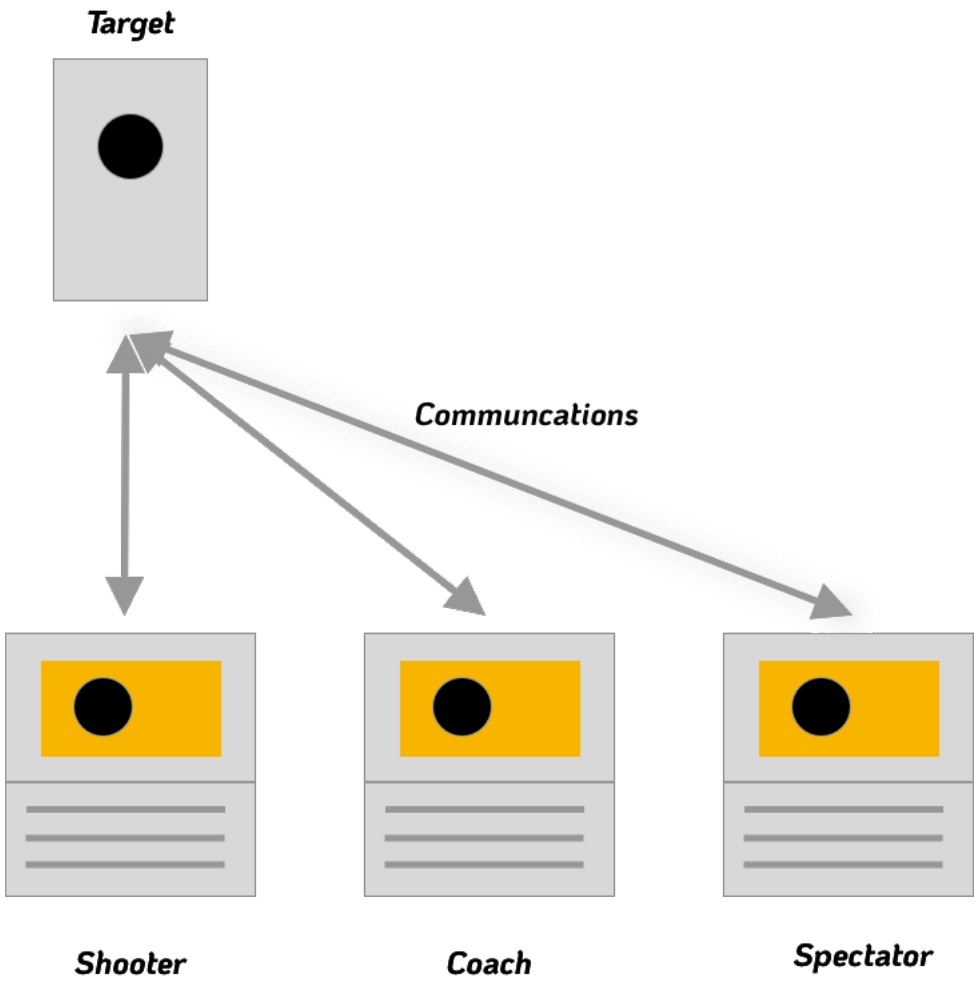

Figure 2: Sample Shooting Range

In the shooting range, the target is used by the shooter to see their shots. At the same time, the coach may be looking at the shots on another screen, while spectators may be watching at another location. This setup will be repeated for each active shooting lane.

Each shooting lane operates as-if it was a single user at someone's home. The differences are:

- Multiple communications channels
- Increased wiring costs

To accommodate these changes, FreeETarget offers multiple communications methods that can be used singly or together as needed. These include

- Single USB connection between target and PC

- Duplicate RD485 connection between target and PC
- WiFi connection between between target and up to four PCs

Single USB Connection

A single USB connection between the PC and the target is the simplest means of using the target. The USB provides communication and power to the target.

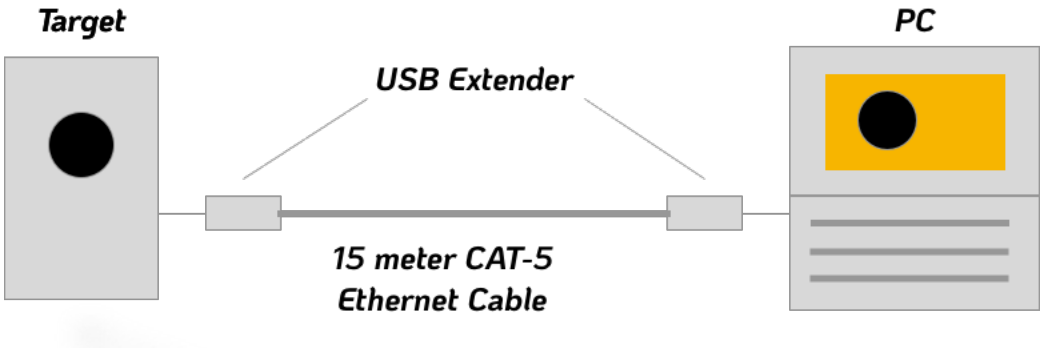

Figure 3: USB Extender

The Amazon.com order numbers are provided in Table 3.

Table 3: Amazon Part Numbers of USB Installation

Item	Description	AMAZON.COM ASIN
1	USB Extender	B06WGVX3NQ
2	CAT 5 Cable	B0BJNZ71K3

The single USB connection is recommended for each target lane since it provides an easy interface to each target and in addition to showing the shot data can be used for configuration and reprogramming.

RS485 Connection

FreeETarget supports a low cost RS485 connection between the PC and the target. While similar to the USB connection, RS485 has some differences

PRO

Low cost cable

Range up to 190 meters

CON

Does not supply power to the target.

Starting with board version 6.2 and higher, the RS-485 circuit is built onto the target circuit. For versions 5.0 to 6.1 you will need to add an additional adapter

Version 6.2 and Higher

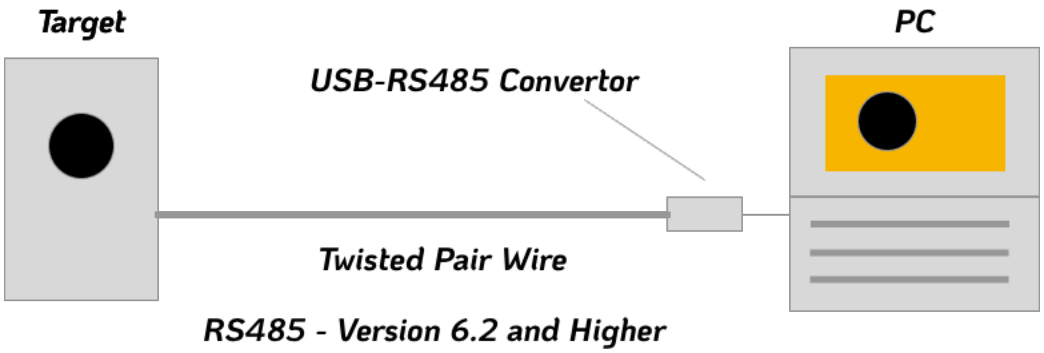

Starting with Version 6.2, the RS485 interface is installed directly onto the board. Simply attach the twisted pair wires to the A and B screw terminals and set the configuration into the software and reboot the board.

{“AUX_MODE”:8}

Table 4: Amazon Part Numbers of USB Installation

Item	Description	AMAZON.COM ASIN
1	USB-RS485 Convertor	B07QN6JVG1
2	Twisted Pair Wire	B0CQMSWVYY

Version 5.0 to 6.1

Prior to 6.2, FreeETarget boards do not have RS485 natively installed, but can be achieved by adding an ES485 convertor to the board and attaching it by a cable harness

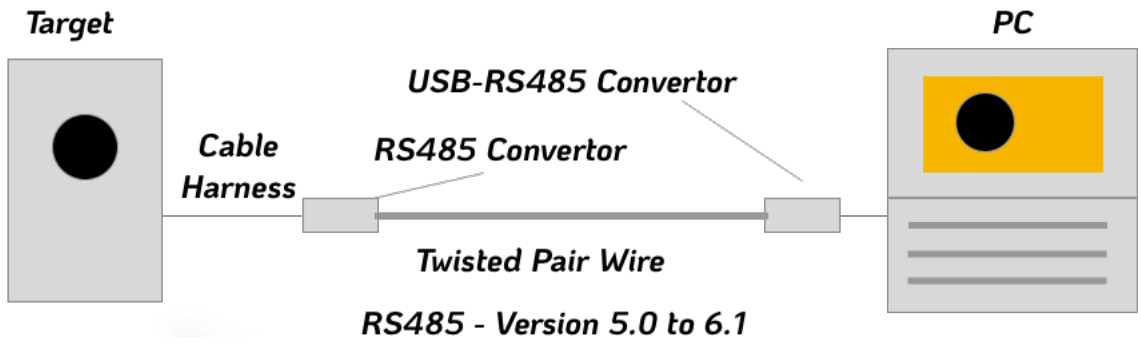

Figure 3: USB Extender

The Amazon.com order numbers are provided in Table 3.

Table 3: Amazon Part Numbers of USB Installation

Item	Description	AMAZON.COM ASIN
1	USB Extender	B06WGVX3NQ
2	CAT 5 Cable	B0BJNZ71K3

The cable harness between the ESP32 board and the RS485 adapter is given in Figure

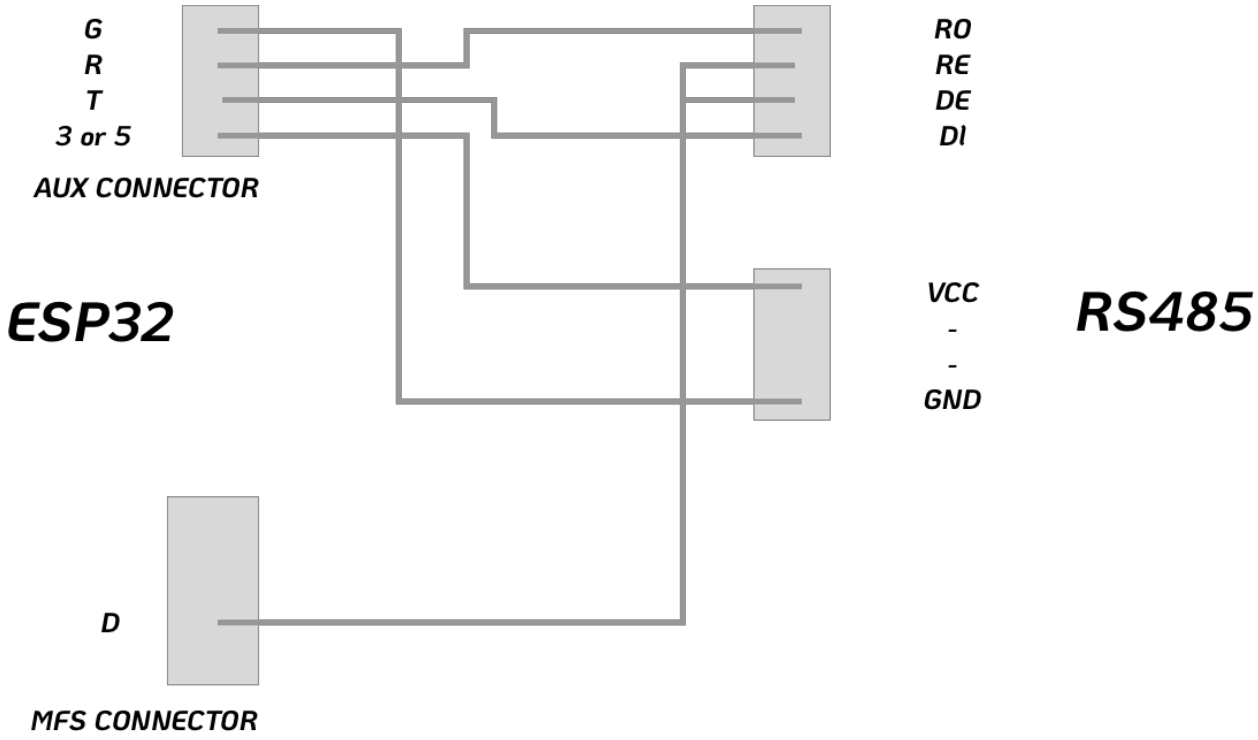

The RS485 driver is enabled by

{“AUX_MODE”:8, “MFS_HOLD_D”:30}

Wired LAN (Ethernet) Connection

A wired Ethernet connection is a reliable way of connecting all of the targets in a range. This method provides the advantage of multiple connections without collisions.

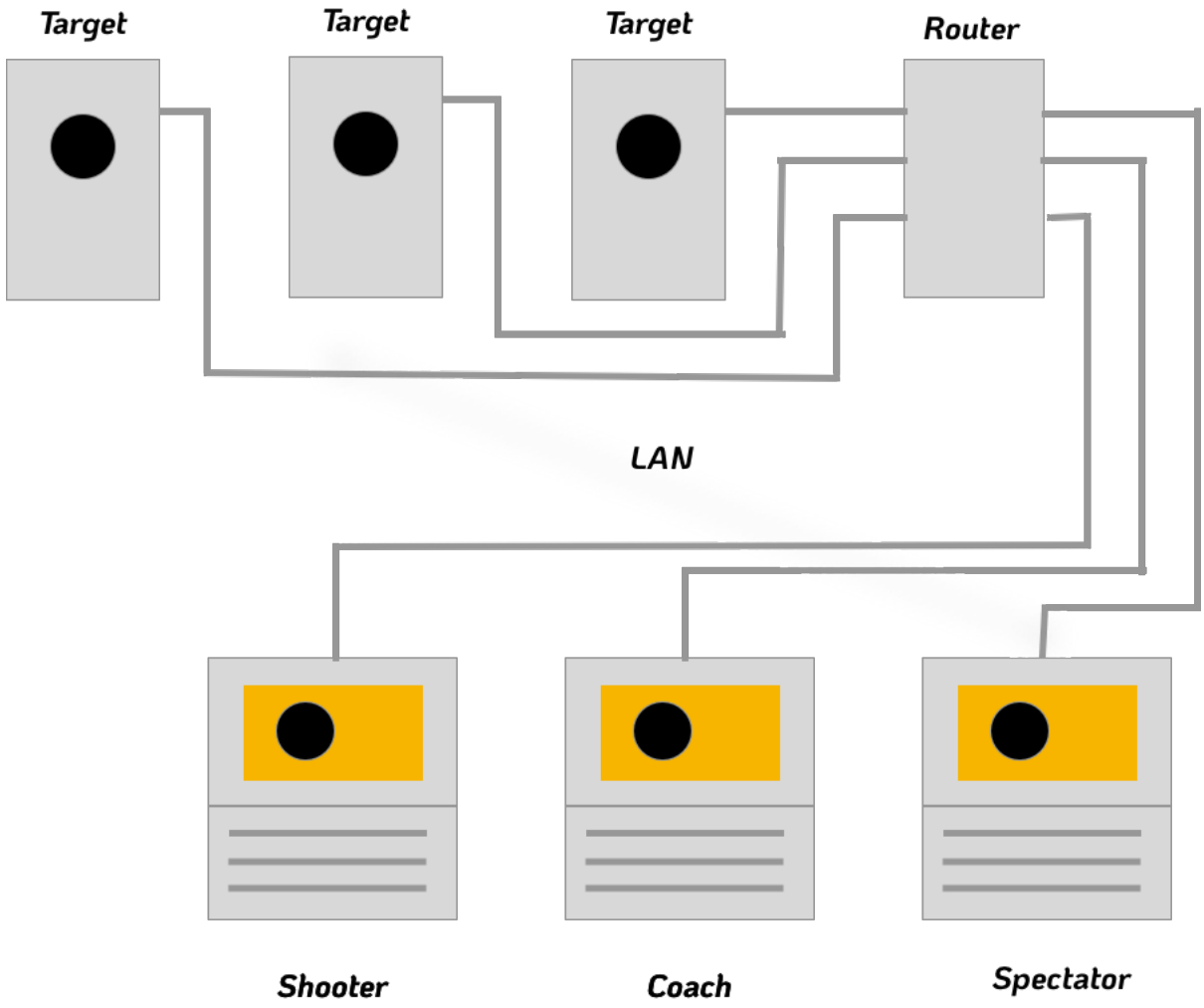

The FreeETarget connects to the LAN using an Ethernet adapter as shown in Figure

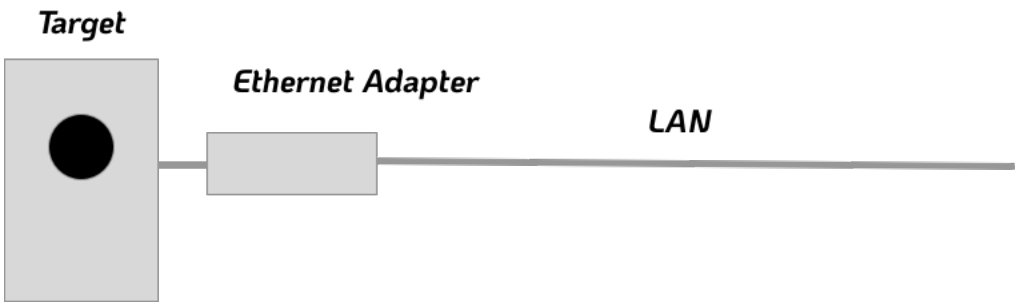

Each target requires the items shown in Table

Item	Description	Part Number
1	Ethernet Serial Convertor	USR-TCT232-T2
2	CAT 5 Cable	Amazon B0BJNZ71K3

The connection between the ESP32 board and the convertor depends on the version of ESP board that is used.

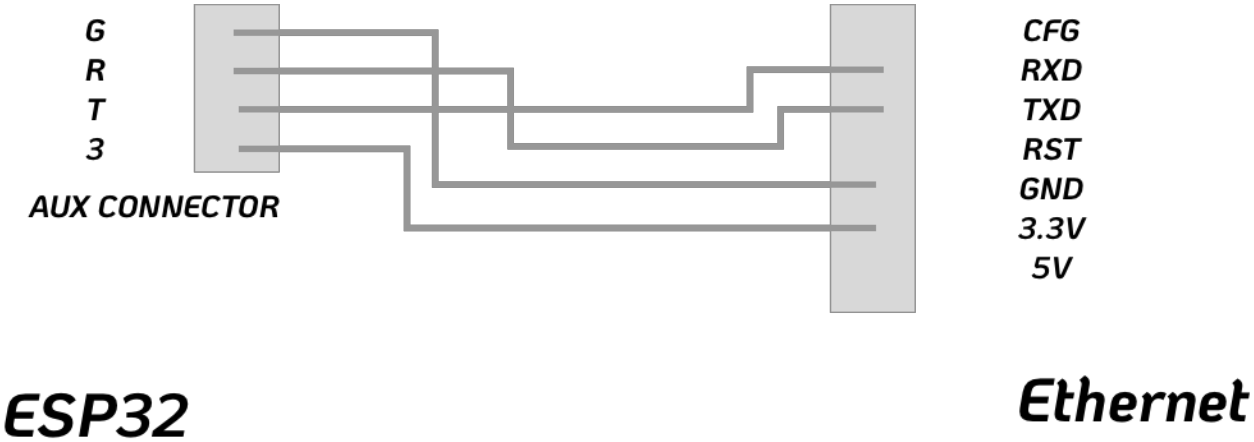

Version 6.2 and higher

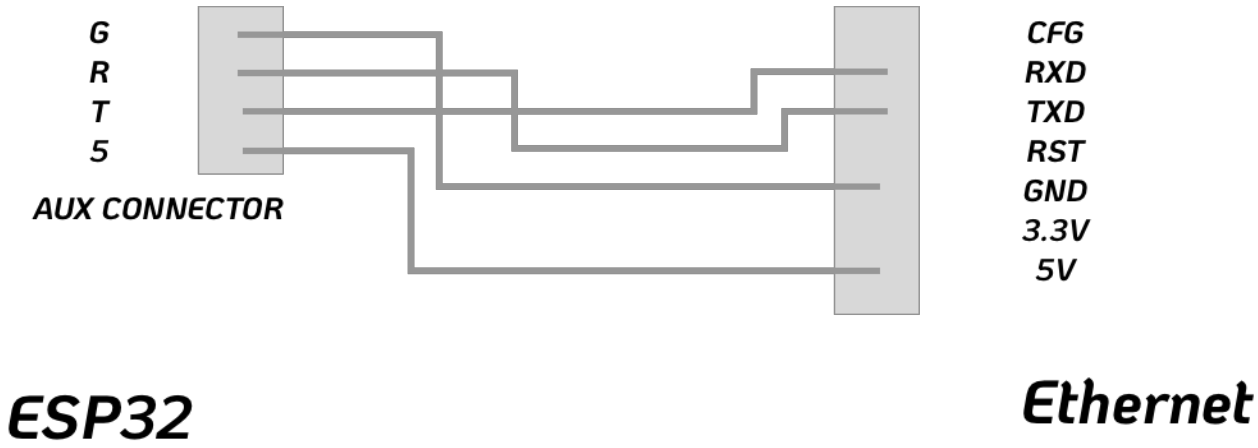

Version 5.0 to 6.1

Note that Version 5.0 to 6.1 supply 5 Volts, while 6.2 and higher supply 3.3

Once attached, the FreeETarget board is configured with

{“AUX_MODE”:1}

Programming the USR-TCP232-T2

The USR-TCP-232-T2 needs to be set up with the following

- The IP address of the convertor to be used on the host network
- Set into server mode
- Setup with the correct communication port
- Setup the communications rate

The first time through, the modules must be programmed in a specific sequence.

- Power the module from a FreeETarget board
- Directly connect the convertor to the PC using a direct wired connection
- Open the LAN setup from your PC setup tab
- Set your PC for a static IP with
    - IP address 192.168.0.1
    - Subnet Mask 255.255.255.0
    - DNS lookup 192.168.0.7
- Open a web browser and connect to 192.168.0.7
- Password admin
- ID: admin
- Set the LAN converter to
    - an address on your desired network, something like 192.168.1.100
    - Server mode
    - Port 1090
- Save and exit the configuration

IMPORTANT

- The converter is very unforgiving if you forget the IP address you set it to.
- Mark the IP address onto the board
- DO NOT change the username or password. If you forget the password, there is no way to recover it

The manuals for the convertor can be found at

https://www.pusr.com/download/M0/USR-TCP232-T2-User-Manual-V1.1.pdf&ved=2ahUKEwj23JqOicuTAxXplWoFHVe8G9MQFnoECBsQAQ&usg=AOvVaw3Va5z5EbAdktlITQ1JQrvF

Configuration Software

https://www.pusr.com/support/faq/usr-tcp232-t2-basic-function-test.html

WiFi Operation

Multiple FreeETargets can be setup on a host network to provide interoperability across multiple targets and multiple PCs. This is illustrated in Figure.

When setup this way, any pc can be attached to any target so that a coach can jump between shooters to watch their progress.

In order to do this, the network has to be setup for the application.

SETUP THE RANGE

The range is setup as shown in Figure 1. The targets are installed as usual and located nearby is the WiFi router. The router should be no more than forty (30) meters from the targets. The Shooter's PC should be located such that they get a strong signal from the router.

WiFi routers come with the ability to directly connect the PC to the router using an Ethernet cable. Leave this in place since it allows remote diagnostics via TeamViewer and the service PC.

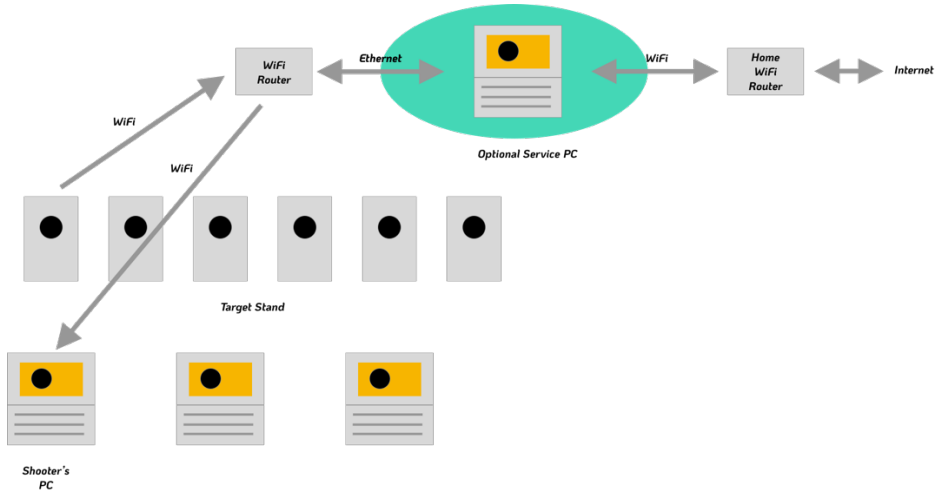

Figure 1: Preferred Range Setup

Router Setup

The router should be setup for the convenience of the shooter and their PC. The following settings are suggested.

Setting	Value	Description
SSID	TargetRange	Easy to recognize
Password	None (open wifi)	No secure data, easy to access for members
IP Address	192.168.109.x	Unique IP address that will not likely conflict with other networks

Target Setup

The target should be setup with the following values

Setting	Description
{"WIFI_SSID":"TargetRange"}	Set to the same SSID as the router
{"WIFI_PWD":""}	No password used. Use {"WIFI_PWD":"mypassword"} if a password is used in the router.
{"NAME_ID":x}	Select a unique (different) name ID for each target See Appendix
	Optional
{"WIFI_IP":"IP address"}	Set in a static IP, ex {"WIFI_IP":"192.168.109.111"}

ACCESSING THE TARGET

Once the targets and router have been setup, the target can be accessed much like any other network device you have.

Using the PC Client

In the client configuration, set in the IP address in the TCP configuration as shown in Figure 3

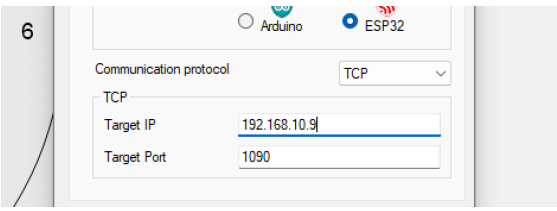

Figure 3: Setting the Target IP Address

When the target connects, it will connect to the IP address and begin the session.

The target will accept up to four simultaneous connections:

- Shooter
- Coach
- Parent
- Observer

Using a Web Browser

The target can be accessed as a web page using a web browser such as Safari or Chrome.

By IP address for example: 192.168.109.23

By target name, for example FET-TARGET.local

SECURITY

The design of FreeETarget assumed a fair amout of trust between the shooters and the shooting range. If this is not the case, then the following steps can be added

- Assign a WiFi password to the target range
- Lock out the target settings by assigning a lock code {“LOCK”:number}. This will prevent anyone from changing the settings unless an unlock code is provided {“UNLOCK”:number}

CAUTIONS

- When using the browser, only one connection will be accepted.
- The target has a WiFi range of fifty-meters in a clear line of sight with no obstructions
- The range manager should assign a WiFi password if they are concerned about security

ASSIGN A TARGET NAME

Each target can be assigned a name so that it is easily identified later.

In the Generic Command field, enter the command

{“NAME_ID”:x} where X is the name ID. The list of

0 – FET-TARGET. (Default)			
1 – FET-1 2 – FET-2 3 – FET-3 4 – FET-4 5 – FET-5 6 – FET-6 7 – FET-7 8 – FET-8 9 – FET-9 10 – FET-10	11 – DOC 12 – DOPEY 13 – HAPPEY 14 – GRUPMY 15- BASHFUL 16 – SNEEZY 17 - SLEEPY	18 – RUDOLF 19 – DONNER 20 – BLITZEN 21 – DASHER 22 – PRANCER 23 – VIXEN 24 – COMET 25 – CUPID 26 - DUNDER	27 – ODIN 28 – WODEN 29 – THOR 30 - BALDAR

Using a NAME_ID of 99 allows the operator to assign a new name to the target.

{“NAME_ID”:99. “NAME_TEXT”:”MyNewTarget”}

CALIBRATING THE TARGET

When operating alone, the calibration constants are stored in the PC. However this means that if the shooters bring their own PCs with them, then the calibration will need to be done every time a new PC is connected to the target. Starting in Version 6.0, the calibration constants can be stored in the target so that the PC client can be switched between targets.

- Connect to the target as you would normally
- Use a conventional target with scoring rings
- Shoot five shots into the target, fairly well spaced

- Open the calibration icon (Upper right, small cross-hairs)
- The Calibration dialog box will appear

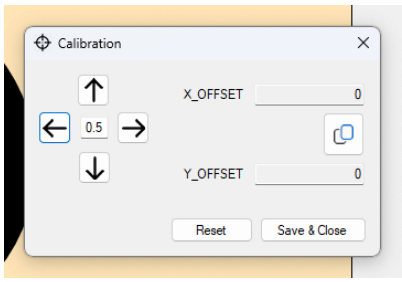

- Reset the calibration.
- Using the four arrows, adjust the shots on the screen to align with the shots on the paper
- Press the copy button (two overlapping squares)
- X out of the calibration screen,. **Do not press Save & Close**
- Return to the Diagnostics Terminl
- Paste the calibration settings into the Generic Command Box

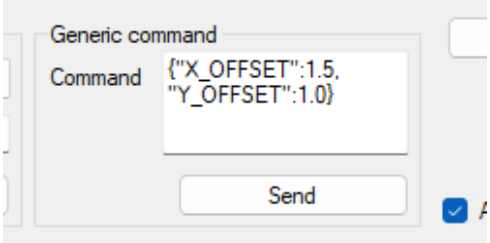

- Press SEND

This will save the calibration into the target for the next shooter.

APPENDIX 1

Target Names

NAME ID	Target Name
0	TARGET (Default)
	Numbers
1	1
2	2
3	3
4	4
5	5
6	6
7	7
8	8
9	9
10	10
	Seven Dwarves
11	DOC
12	DOPEY
13	HAPPY
14	GRUMPY
15	BASHFUL
16	SNEEZY
17	SLEEPY
	Reindeer
18	RUDOLF
19	DONNER
20	BLITZEN
21	DASHER
22	PRANCER
23	VIXEN
24	COMET
25	CUPID
26	DUNDER
	Norse Gods
27	ODIN
28	WODEN
29	THOR
30	BALDAR
	Custom
31	TEST
99	{“NAME_TEXT”:”myName”}. -> FET-myName
100	{“NAME_TEXT”:”myName”}. -> myName
101	Serial number -> FET-SerialNumber